Datasheet Series PLA

Höcherl & Hackl
The electronic load

Model	PLA1506	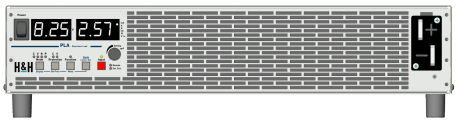
Order no.	22-013-002-01	

Basic operating modes	CC, CV, CR, CP
Standard interfaces	-
Max. input voltage Vmax	60 V
Min. input voltage Vmin [1]	1.2 V
Max. load current Imax	120 A
Continuous power	1500 W
Short-time power [2]	1500 W
Voltage setting	0 ... 60 V
Current setting	0 ... 120 A
Resistance setting	0.01667 Ohm ... 33.333 Ohm
Power setting [3]	0 ... 1500 W
Rise and fall time fast [4]	40 µs
Load terminals (front) [5]	FKS20/4-SM8
Load terminals (rear) [6]	FKS20/4-SM8
Power consumption	70 VA
Noise max. ca. [7]	61 dB(A)
Weight ca.	8.5 kg
Housing / 3D model [8]	19" - 2 U / PLA_M10
Width x Height x Depth	440 x 106 x 334 mm

1. Minimum input voltage for maximum static load current.
2. Level and duration of the peak power depend on the previous power.
3. The setting range extends max. to the possible shorttime power.
4. Rise and fall times are defined of 10 ... 90 % and 90 ... 10 % of the maximum current (CC mode, fast regulation speed, tolerance ±20 %). Rise and fall time at setting "slow": approx. 500 µs.
5. PK4-30L: Binding posts for 4 mm laboratory jack and stripped wires with diameter up to 4 mm, max. 30 A
   BPK4-30L: Touch-protected binding posts for 4 mm laboratory jacks and stripped wires with diameter up to 4 mm, max. 30 A
   BPK4-60L: Touch-protected binding posts for 4 mm laboratory jacks and stripped wires with diameter up to 6 mm, max. 60 A
   SBU4-32: Safety sockets touch-protected for 4 mm laboratory jacks, max. 32 A
   FKS20/4-SM8: Flat copper bars 20 x 4 mm vertical with hole for screw M8
   Models with copper bars (FKS) are delivered with safety covers.
6. PK4-30L: Binding posts for 4 mm laboratory jack and stripped wires with diameter up to 4 mm, max. 30 A
   BPK4-30L: Touch-protected binding posts for 4 mm laboratory jacks and stripped wires with diameter up to 4 mm, max. 30 A
   BPK4-60L: Touch-protected binding posts for 4 mm laboratory jacks and stripped wires with diameter up to 6 mm, max. 60 A
   SBU4-32: Safety sockets touch-protected for 4 mm laboratory jacks, max. 32 A
   FKS20/4-SM8: Flat copper bars 20 x 4 mm vertical with hole for screw M8
   Models with copper bars (FKS) are delivered with safety covers.

7. Measured on the front from distance of 1 m.
8. Device height incl. equipment feet. Maximum width and depth incl. handle. Installation depth without connection cable. 1 U = 44.45 mm.

Operating modes		
Basic operating modes	CC, CV, CR, CP	
Combined operating modes	CC+CV, CP+CV, CR+CV, CP+CC, CR+CC, CV+CC	
Accuracy of setting		
	of setting value	of corresponding range
Voltage	±0.1 %	±0.05 %
Current	±0.2 %	±0.05 %
Resistance (at V > 5 % of voltage range)	±1.4 %	±0.3 % of current range
Power (at V and I > 10 % of range) (at V or I 5 ... 10 % of range)	±0.7 % ±2 %	
Resolution	12 bits	
Accuracy of adjustable protections		
	of setting value	of corresponding range
Overcurrent protection	±0.5 %	±0.05 %
Undervoltage protection	±0.3 %	±0.02 %
Resolution	12 bits	
Accuracy of measurement		
	of measured (actual) value	of corresponding range
Voltage	±0.1 %	±0.05 %
Current	±0.2 %	±0.05 %
External control voltage 0 ... 10 V	±0.2 %	±0.1 %
Resistance	is calculated from voltage and current	
Power	is calculated from voltage and current	
Resolution	16 bits	
Sampling rate	100 µs, not triggerable	
Accuracy of displays (user interface)		
Display user interface	accuracy of each measurement, ±1 digit of the display value	
Resolution	see display resolution page 22	
Dynamic function (LIST)		
Number of load levels	max. 100, with corresponding ramp, dwell and sampling times	
	min.	max.
Dwell time	1 ms	100 s
Ramp time	0 s	100 s
Resolution	1 ms	
Accuracy of setting times	±0.02 %	
Sampling times	1 ms ... 100 s, resolution 1 ms	
Data acquisition		
	of measured (actual) value	of corresponding range
Accuracy voltage	±0.1 %	±0.05 % ±1 LSB
Accuracy curent	±0.2 %	±0.05 % ±1 LSB
Resolution	16 bits	
to external memory		
Sampling rate	0.1 ... 30 s, 0.1 s resolution	
Measurement data	time stamp, voltage, current	
Number of measure-ment points	limited by flash drive memory size	
File format	.csv	

to internal memory		
Sampling rate	1 ms ... 100 s, 1 ms resolution	
Measurement data	time stamp, voltage, current	
Number of measure-ment points	max. 100	
Settings memories		
Number of user settings	10, selectable (incl. programmed list)	
I/O port: outputs and inputs		
Status and control outputs	status load input (on/off, low active) overload (OV, OCP, OPP, OTP, low active)	
Output level	5 V	
Control inputs	load input (on/off, low active) control input (activates I/O port, low active)	
Input level	3 ... 30 V	
I/O port: accuracy of analog control 0 ... 10 V		
	of the setting value	of the corresponding range
Voltage	±0.2 %	±0.05 %
Current	±0.2 %	±0.05 %
Resistance (at V > 5 % of voltage range)	±1.6 %	±0.4 % of current range
Power (at V and I > 30 % of the corresponding range)	±0.55 %	±0.2 %
Power at V and I > 5 % and < 30 % of the correspon-ding range	±0.9 %	±0.35 %
	input resistance of analog inputs >10 kΩ	
I/O port: accuracy of analog monitor outputs 0 ... 10 V		
	of analog signal of real value	offset voltage
Voltage	±0.1 %	±15 mV
Current	±0.2 %	±15 mV
	minimum load 2 kΩ	
I/O port: permissible voltages		
Vin-io (GND - neg. load input)	max. 2 V [1]	
VioPE (GND - PE)	max. 125 V [1]	

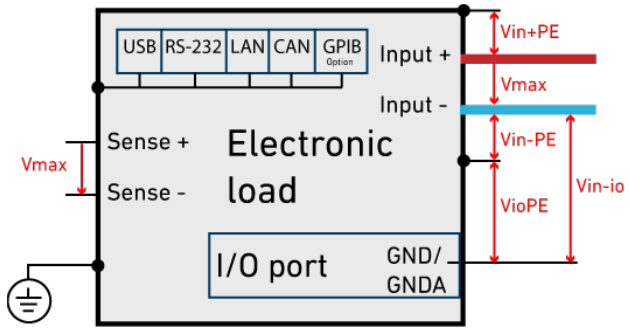

The specified accuracies refer to an ambient temperature of 23 ±5 °C. The specified accuracies are valid when the sense lines (if available) are connected and when the unit is connected to undisturbed voltages (ripple and noise < 0.1 %). At voltages with higher disturbance values the accuracy can change for the worse.

1. positive/negative DC voltage or RMS value of a sinusoidal AC voltage

Technical Data

Input	
Input resistance	>50 kΩ when load input is off diode function at reverse polarity up to nominal current
Input capacity	see model overview
Parallel operation	up to 5 devices in Master-Slave operation
Maximum input voltage Vmax	see model overview
Minimum input voltage Vmin	see model overview
Input: permissible voltages	
Vin-PE (neg. load input - PE)	max. 125 V [1)]
Vin+PE (pos. load input - PE)	Vmax + max. 125 V [1)]
Power	
Continuous power	see model overview (at Ta = 21 °C)
Derating	-1.2 %/°C for Ta > 21 °C
Overload capacity	see model overview The possible short-time power depends on the temperature of the device and with that on the normal rating taken before.
Protection and monitoring	
Protective devices	overcurrent overpower overtemperature
Monitoring	overvoltage indication reverse polarity indication undervoltage display (if the input voltage is too low for the set current)
Terminals	
Load input	see model overview
Sense	at I/O port, only at models up to 120 V
Operating conditions	
Operating temperature	5 ... 40 °C
Stock temperature	-25 ... 65 °C
Max. operating height	2000 m above sea level
Pollution degree	2
Max. humidity	80 % at 31 °C, linear decreasing to 50 % at 40 °C
Min. distance rear panel - wall or other objects	70 cm
Cooling	temperature-controlled air cooling
Noise	see model overview
Mains voltage with option PLA18	1/N/PE AC 85 ... 264 V 50 ... 60 Hz DC 10 ... 18 V, max. 4 A, reverse polarity protected
Mains cable	length max. 3 m cross-section of mains leads min. 1 mm²
Power consumption	see model overview

Housing	
Color Front panel Rear panel Side panels, top	 RAL7035 (light grey) stainless steel RAL7037 (dusty grey)
Dimensions, weight	see model overview
Safety and EMC	
Protection class	1
Measuring category	O (CAT I according to EN 61010:2004)
Electrical safety	DIN EN 61010-1 DIN EN 61010-2-030
EMV, CE marking	DIN EN 55011 DIN EN 61326-1 DIN EN 61000-3-2 DIN EN 61000-3-3
Standard interfaces	
Data interfaces	-
I/O interface	standard I/O port (not isolated)
Available options	
Data interfaces PLA01 PLA02 PLA03	 USB, RS-232, Ethernet GPIB (for models up from 400 W, requires PLA01) CAN (requires PLA01)
Mechanical options PLA08 PLA10 PLA11 PLA12 PLA13 PLA14 PLA15 PLA16 PLA17	 safety cover for copper bars 19" installation kit for 1 device with ½ 19", 1 U 19" installation kit for 2 devices with ½ 19", 1 U 19" installation kit for 1 device with ½ 19", 2 U 19" installation kit for 2 devices eith ½ 19", 2 U 19" installation kit for 1 device with ½ 19", 2 U and 1 device with ½ 19", 1 U 19" installation kit for 1 device with ½ 19", 2 U and 2 devices with ½ 19", 1 U carrying handle for 1 device with ½ 19", 1 or 2 U 19" installation kit for 1 device with 19", 2 U
DC-Versorgung PLA18	 12 V DC supply (10 ... 18 V)
Calibration, warranty	
FCC-PLAxx	Factory Calibration Certificate, twice free of charge
Warranty	2 years

1. positive/negative DC voltage or RMS value of a sinusoidal AC voltage