Höcherl & Hackl
The electronic load

Electronic DC Loads

DC LOAD

HES SERIES

REV. 3

Electronic DC Loads

DC LOAD HES SERIES

- Standard power range from 600 to 14,400 W
- Operation via graphical touch interface
- Basic operating modes CC, CV, CR, CP
- Combined operating modes CC+CV, CR+CC+CV, CP+CC+CV, CV+CC
- Models with multiple current ranges
- High voltage variants
- Models down to near 0 V
- Dynamic loads, synchronous DAQ
- Square wave function
- Modulator function
- Frequency sweep
- Voltage sweep to determine U/I characteristics
- Internal measurement data storage
- Fast block data transfer
- Discharge function for energy storage tests
- Internal resistance measurement
- MPP tracking
- Trigger model
- Master-slave operation
- Bilingual help system (DE/EN)

HES SERIES – Brief Profile

The performance range of these universal DC loads enables the testing of a wide variety of power supplies and energy storage devices.
Depending on the model, the devices can be overloaded up to twice their rated power for short periods.

The convenient operation via a brilliant 4.3" touch display gives the user a modern smartphone feeling.

In order to precisely set and measure even small currents, there are MR variants with several setting ranges.
All common data interfaces are standard, only GPIB is optional.

Interfaces

- ◉ RS-232
- ◉ USB
- ◉ LAN
- ○ GPIB
- ◉ CAN
- ◉ I/O port
- ○ I/O port isolated

◉ standard ○ option

Applications

- Step response test
- Electrochemical impedance spectroscopy (EIS)
- Voltage stability test
- Pulse, burn-in, and end-of-line tests
- Load profile simulation
- MPP Tracking

Test Objects

- Power supplies, power adapters
- Batteries, rechargeable batteries, fuel cells, ultracaps
- Energy management systems
- Electronic components and assemblies
- PV panels, solar cells
- DC/DC converters
- Control units
- Vehicle electrical systems (12V/48V)

Features

Operating Modes

The devices have the basic operating modes constant current, constant voltage, constant resistance, and constant power (CC, CV, CR, CP mode). In each operating mode, a protection value for under-voltage and overcurrent can be set. This enables the combined operating modes CC+CV, CR+CC+CV, CP+CC+CV, and CV+CC.

Protections, Messages

- Overcurrent limitation
- Power limitation
- Overtemperature warning
- Overtemperature protection
- Overvoltage notification
- Reverse polarity notification
- Undervoltage protection
- Protection of GND lines at the I/O port

models with higher power upon request

Loading Capability

The standard range of models covers power classes from 600 W to 14,400 W.
Models up to 300 V can also be overloaded in terms of power for short periods. The level and duration of the possible overload power depends on the operating temperature of the power stage. The device indicates the currently possible short-term power.
This means that these devices can also be used for applications that require significantly more power for short periods.

Cooling

The devices are air-cooled. To keep operating noise low, fans are continuously controlled by temperature and current. To make better use of the maximum possible overload capacity, the fans can be set to full power.

I/O Port

analog signals in realtime!

Standard I/O port for:

- Analog load setting of I, P, R, and U
- Analog protection specification for I and U
- Load input activation
- Analog voltage monitoring output 0 ... 10 V
- Analog current monitoring output 0 ... 10 V
- Trigger input
- Trigger output
- Digital input & programmable control output

Galvanically insulated I/O Port
(Option HES06)

The HES06 option can be installed for galvanic insulation of the analog I/O port from the load circuit. Using this card prevents ground loops and makes it possible to test bipolar voltages with two devices using a common analog control.

Factory Calibration Certificate
(FCC-HES)

The devices come with a free Factory Calibration Certificate (FCC). The calibration process is monitored in accordance with DIN EN ISO 9001. This calibration certificate documents traceability to national standards for the representation of the physical unit in accordance with the International System of Units (SI).
For use under laboratory conditions, H&H recommends a calibration interval of 2 years. This is an empirical value that can be used as a guideline for the initial period of use. Depending on the intended use, duration of use, relevance of the application, and environmental conditions, the operator should adjust this interval accordingly.

Drivers

POWERED BY LabVIEW

NI-certified LabVIEW drivers for download:
www.ni.com/downloads/instrument-drivers/

Models With Zero-Volt Power Supply (ZV) or for High Voltage (HV)

HESxxxxZV
HESxxxxHV

For applications that require the test object to be loaded close to 0 V (e.g., fuel cell testing), the HESxxxxZV model variants are available. The ZV models can compensate for voltage drops on the supply lines up to approximately 0.5 V. If the I/O port of an HESxxxxZV is to be used, the GND signal of the I/O port must be galvanically insulated from the negative load input. We therefore recommend using a galvanically insulated I/O port (option HES06).
For particularly high input voltages up to 1200 V, the HES HV models are designed.
See model overview from page 16.

Models With Multiple Ranges (MR)

HESxxxxMR3
HESxxxxMR4

Setting and measuring the smallest currents with high accuracy and resolution is possible with the models from our MR multi-range variant. There are models with 3 or 4 "real" range settings for current and thus resistance and power. For models up to 1,500 W, the current ranges are staggered by a factor of 10.
See model overview from page 16.

Functions

Overcurrent and Undervoltage Protection

Adjustable overcurrent and undervoltage protections are permanently active. Both protections work in all operating modes.
Undervoltage protection operates in two different modes:

- regulating transition (e.g. CC-CV operation at battery discharge)
- switching transition (short dead time, e.g. when switching the input voltage)

Data Acquisition (DAQ)

Data records of voltage and current are stored synchronously with a time stamp at defined intervals. Up to 40,000 data records are stored in a ring buffer. Once recording is complete, the data can be read or transferred to a USB flash drive.

Binary Block Data Transfer

Data transfer according to the IEEE 488.2 standard ensures more efficient and faster reading of large amounts of data compared to the transfer of ASCII data.
Binary block data transfer is intended exclusively for reading measurement data sets and is only possible via RS-232, USB, or LAN.

Static Data Logging

For slow processes, the electronic load can also store voltage and current directly to a USB flash drive in manual mode. Writing intervals are in the range of seconds.

Load Profiles (LIST Function)

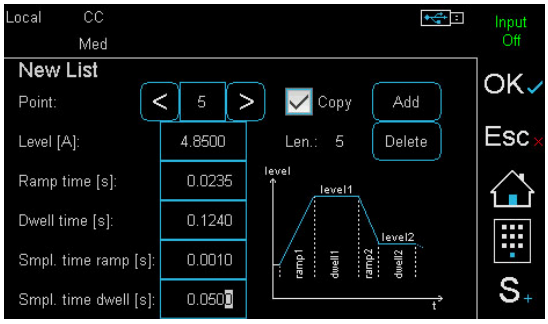

Definition of a list waveform in CC mode with synchronized measurement recording of time, voltage, and current

The electronic load can reproduce load profiles in all operating modes (CC, CV, CR, CP) using the LIST function. Each setting has a dwell time and a ramp time.
Voltage and current are measured synchronously and stored with a timestamp.
Individual sampling times can be defined for each section of the curve.

Squarewave Function

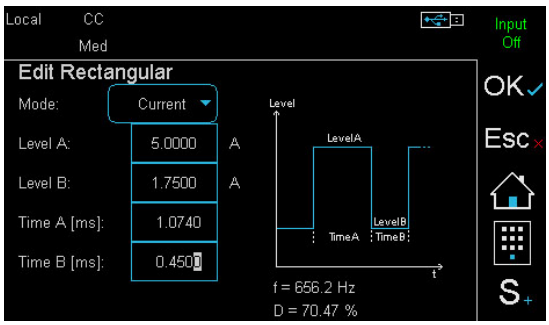

Rectangle definition

In addition to the list function, the user interface offers a convenient way to generate a rectangular load curve.

PWM Function

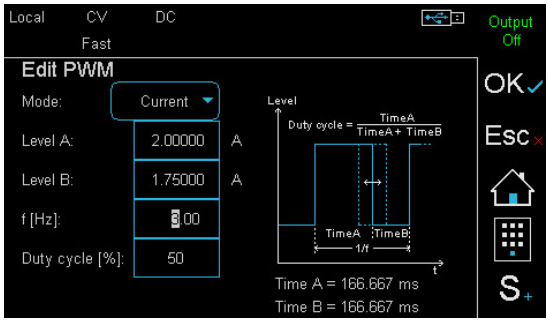

PWM definition

In manual mode, the switching frequency and duty cycle can be set for the two amplitude values using the PWM function.

Modulator Function

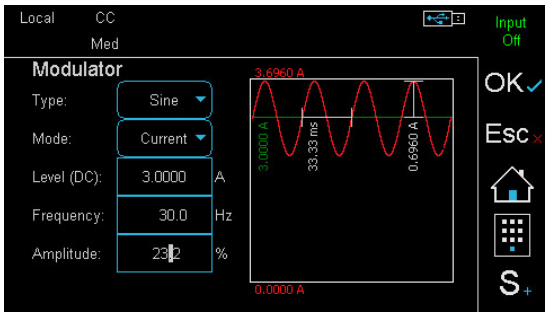

Modulator settings

In CC or CV mode, the modulator adds a sine, square, or triangle waveform signal to a static setting. The frequency and modulation depth are adjustable.

Frequency Sweep

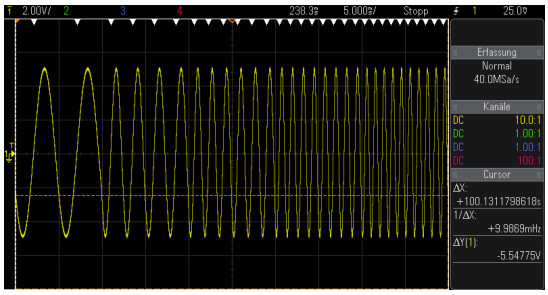

Swept f/U curve

An advanced feature of the modulator is the frequency sweep. By specifying the start, stop, and step frequencies, as well as a defined dwell time for each frequency point, the frequency of the superimposed modulation can be systematically varied.
This works in CC and CV modes.

Discharge Function, Test of Energy Storage Devices

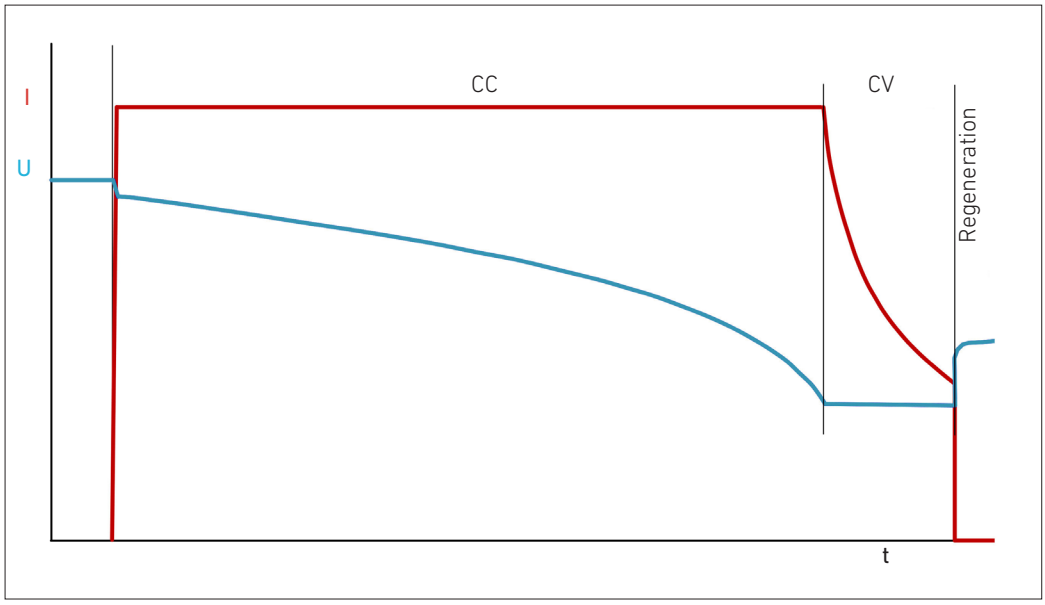

Discharge process in IUa mode

The discharge function tests energy storage devices such as batteries, rechargeable batteries, ultracaps, electrolytic capacitors, etc. by discharging them in CC, CP, or CR mode. The discharge function can be combined with the list function, enabling pulsed discharge.
IUa discharge (CC+CV discharge) is particularly helpful: here, the test object is discharged with constant current down to a defined voltage. This voltage is kept constant until a defined minimum current is reached.
Stop criteria are charge, energy, time, current, and voltage.
During data logging, a follow-up time can be set to observe the recovery phase.

Voltage Sweep

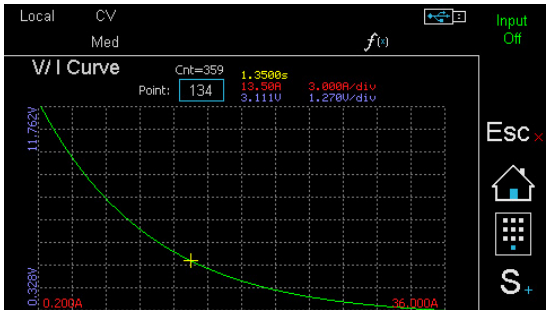

Swept U/I characteristic

The voltage sweep function is used to determine U/I characteristics. To do this, a voltage ramp is defined via the user interface using the start and end voltage and the corresponding duration of the sweep process. The ramp can be ascending or descending. After the function has been executed, the recorded measurement data can be viewed in the graphical Data Viewer or exported to a connected USB flash drive.

MPP Tracking

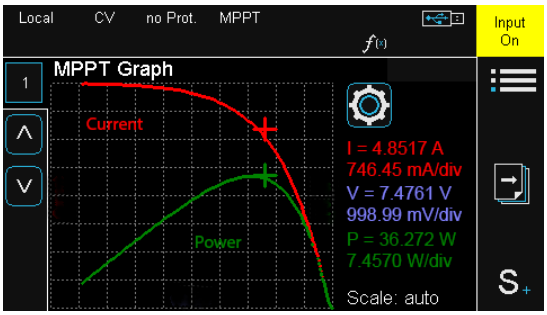

U/I and U/P characteristic

The Maximum Power Point Tracking (MPPT) function consists of two sub-functions, sweeping and tracking, which continuously alternate at an adjustable interval.
If the measured open-circuit voltage at start-up is greater than the minimum voltage, the electronic load performs a sweep and then controls the global MPP found during the sweep.
The U/I characteristic curve can be read out via a data interface.

H&H SyncroLink

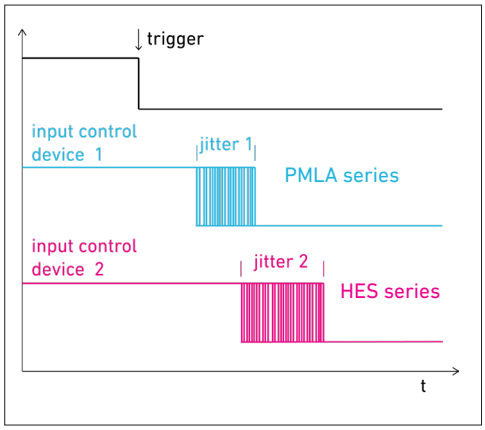

Jitter when repeatedly switching the load input on various serial devices

Every device reacts with a certain amount of jitter, a variable delay between the control event and execution. This cannot be avoided, but additional delays between multiple H&H devices can be reduced using the H&H SyncroLink cable.
It ensures synchronization via the RS-232 interfaces of all devices, even those from different series.

Details see Application Note 21.

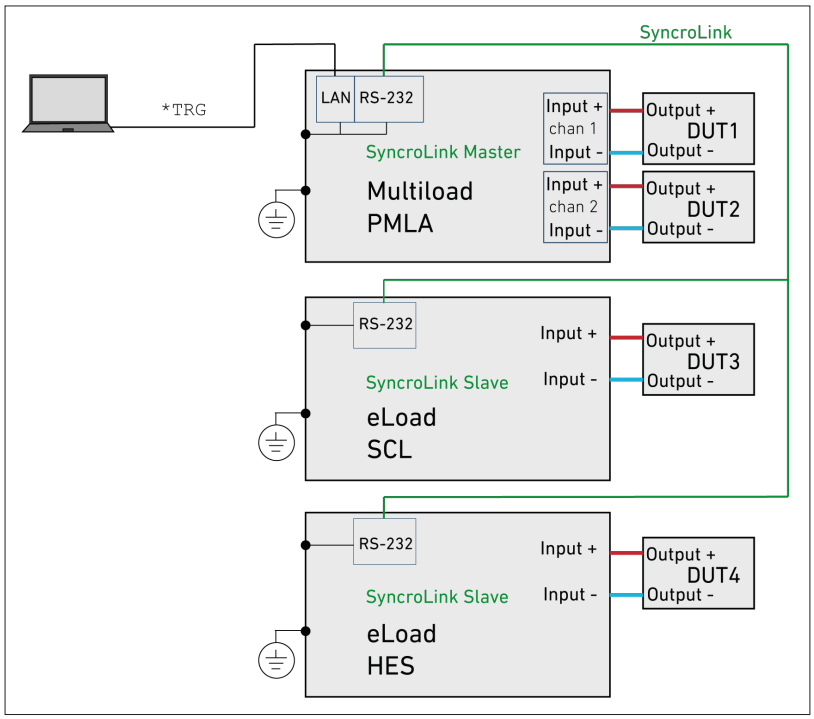

Connection via H&H SyncroLink

Watchdog Function

To protect the device under test in the event of communication problems, the electronic load has a watchdog function in digital remote control mode that switches off the load input if the previously programmed watchdog delay time expires without the watchdog being reset.

Changing Regulation Speed

Sometimes special DUTs or very long load cables require modification of the electronic load's regulation time constant to avoid oscillations and establish stable operation.
Regulation speed slow - medium - fast are selectable.

Save Settings

On request, the settings of the electronic load can be saved in one of 10 memory locations so that they can be reloaded at a later time. When powered on, the device can either set the reset state or one of the memory locations 0 ... 9.

Trigger Model

Various functions and settings can be triggered by a configurable trigger event:

- Load input on/off
- Start/stop list operation
- Start/stop measurement data acquisition
- Set triggered settings for all operating modes

Available trigger sources: external, bus, manual, voltage, current.

Master-Slave Operation

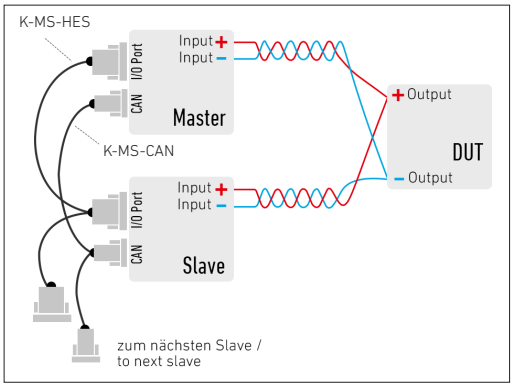

Master-slave connection in a system network

To increase the power or current, up to 5 HES loads of the same type and firmware version can be connected in parallel in master-slave operation.
From an external perspective, the system behaves as a single device. The master unit regulates the entire current of the system, displays the total measured values, and provides them on request via one of the data interfaces.

Cabling:
One set each of master-slave cables K-MS-HES and K-MS-CAN on all slave units (available from H&H or can be assembled yourself).

Restrictions:
DAQ functions are not available in master-slave mode, and functions for setting and reading device parameters are only available to a limited extent. The CAN interface is not available for data communication. When using the K-MS-HES master-slave cable, the I/O port is no longer accessible. To still be able to tap monitor signals, we offer a SubD25 splitter as an accessory.

Internal Resistance Measurement

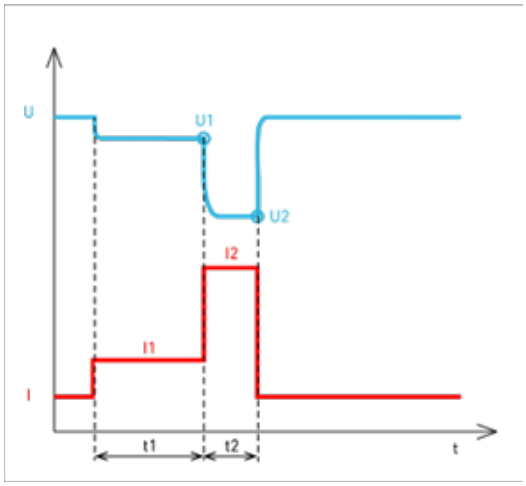

Principle of Ri calculation

The electronic load can measure the DC internal resistance of the connected test object. The internal resistance Ri is determined according to the principle specified in various standards for batteries and accumulators, e.g., DIN EN 61951, DIN EN 61960.
At intervals of a few seconds, the load measures the terminal voltage of the test object (U1, U2) at two defined load levels (I1, I2) and calculates Ri from this.
The load levels I1 and I2 and their durations are adjustable.
In manual mode, the load can save the parameters and the result of the measurement to a USB flash drive at the touch of a button, enabling high throughput with many test specimens.

Load Control Tool

Setting Menu

The Load Control Tool is control software for electronic DC loads from various H&H series. It controls all important device functions while continuously displaying measured values and status.

www.hoecherl-hackl.com/downloads/

List Editor

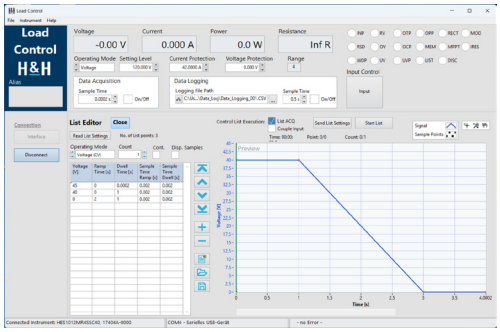

The List Editor generates tabular setting values for current, voltage, power, or resistance, the corresponding rise and fall times, and the dwell times.
In addition, a separate measurement rate for current and voltage synchronous with the setting values can be specified for each rise and dwell time.
The generated waveform is sent directly to the device via a data interface or stored on a data carrier for further processing.

Data Viewer

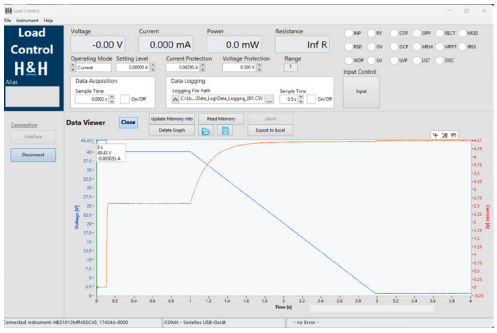

Measurement values from the device's own DAQ memory can be read from the load using the Data Viewer and displayed graphically.
The data can then be saved as a *.CSV file on a storage medium for further processing.

MPP Tracking

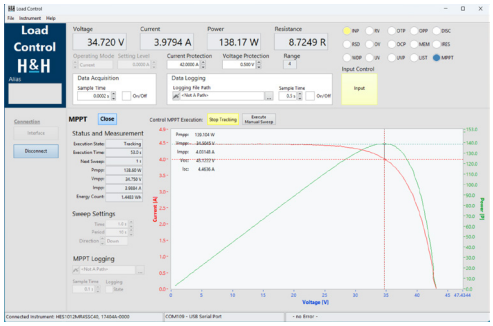

The MPPT function collects measurement data from a connected solar panel. The function continuously switches between MPPT and a sweep process. During the MPPT process, the load regulates the global MPP found during the sweep function.

Views

HES 1/2 19“, 2 U Front View

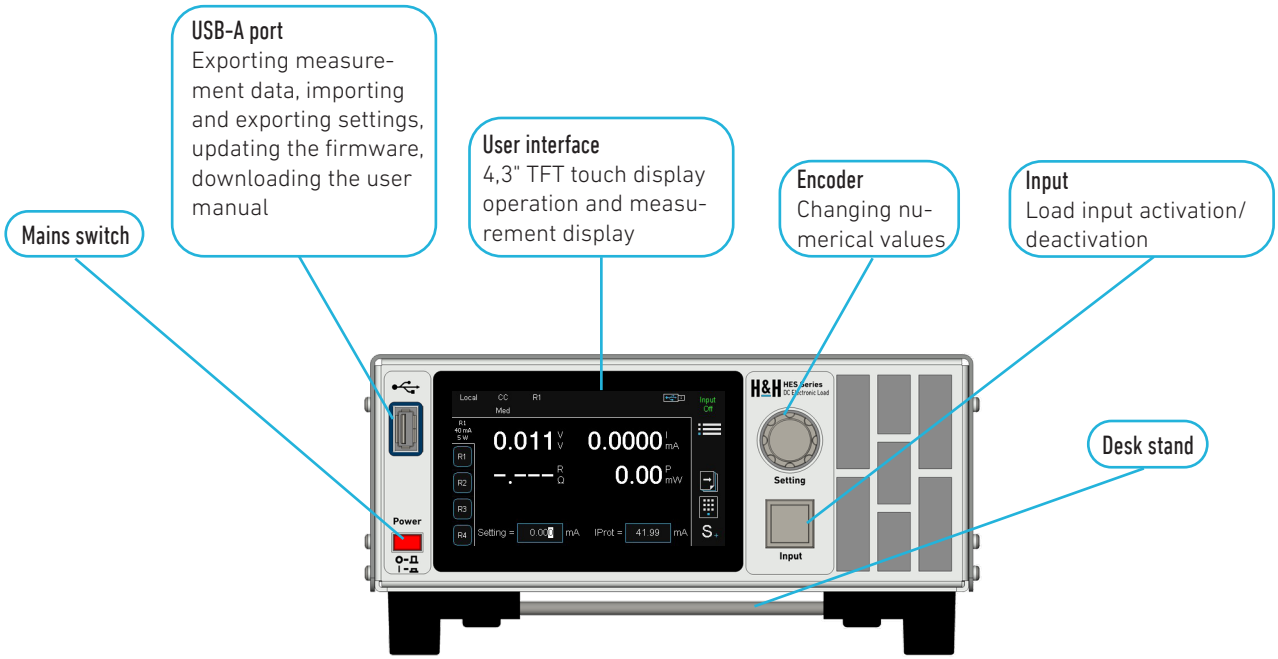

HES 1/2 19“, 2 U Rear View

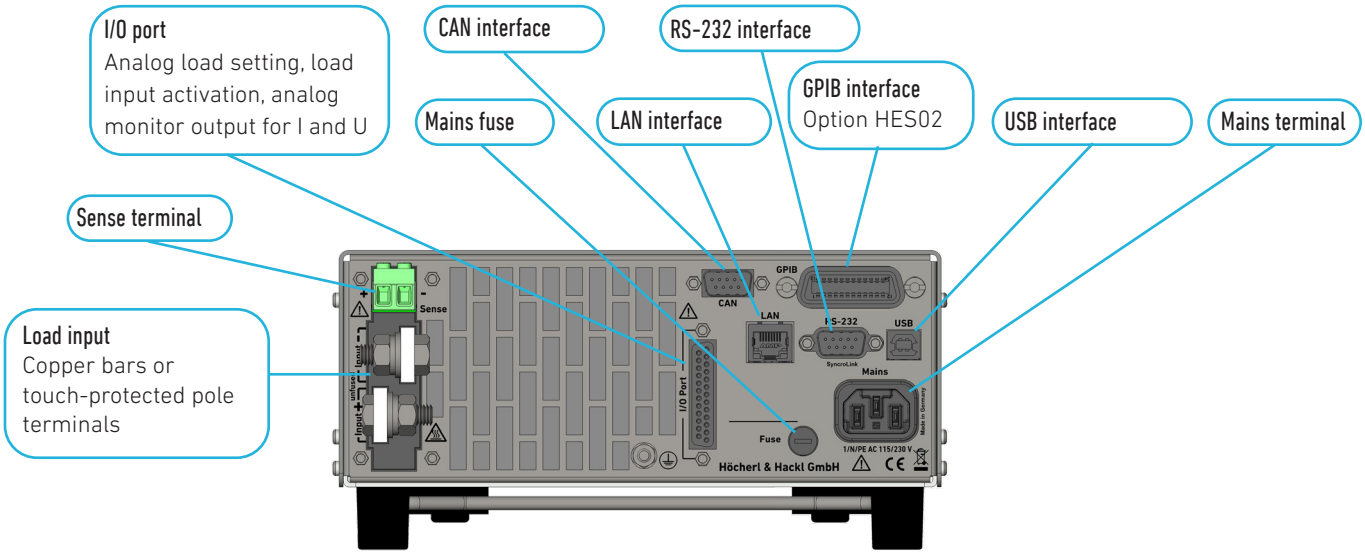

HES 19“, 2 U

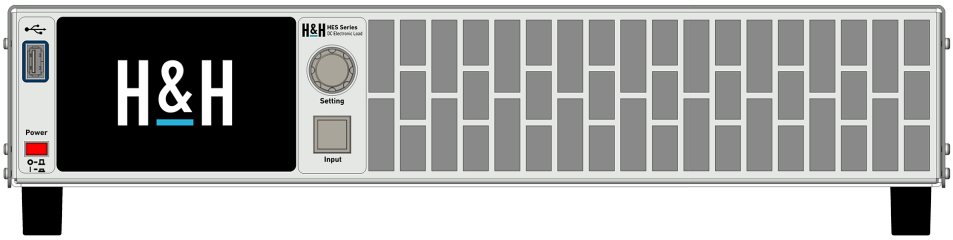

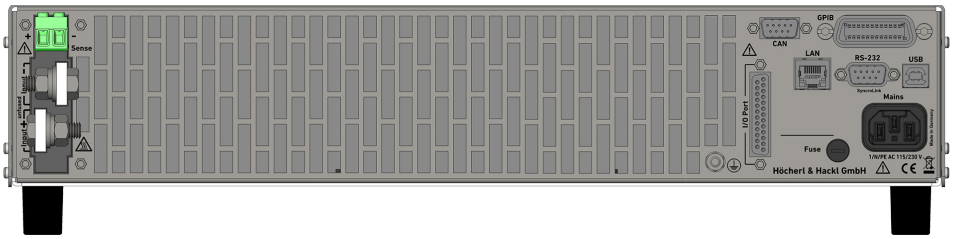

HES 19“, 3 U

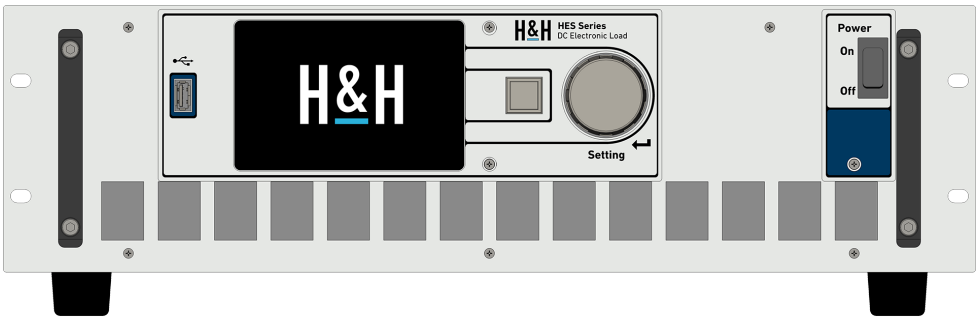

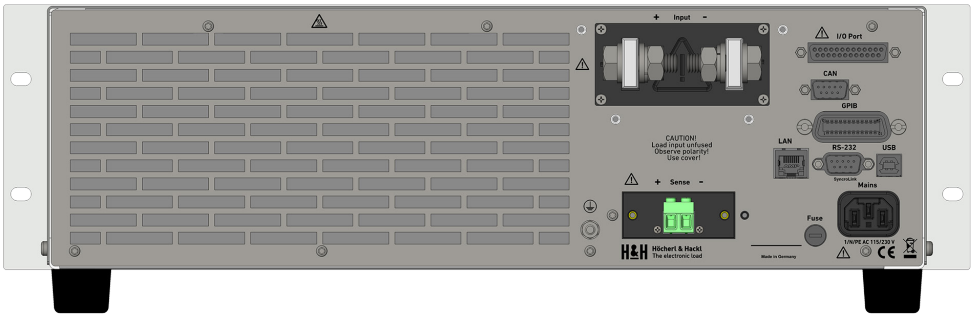

HES 19“, 5 U

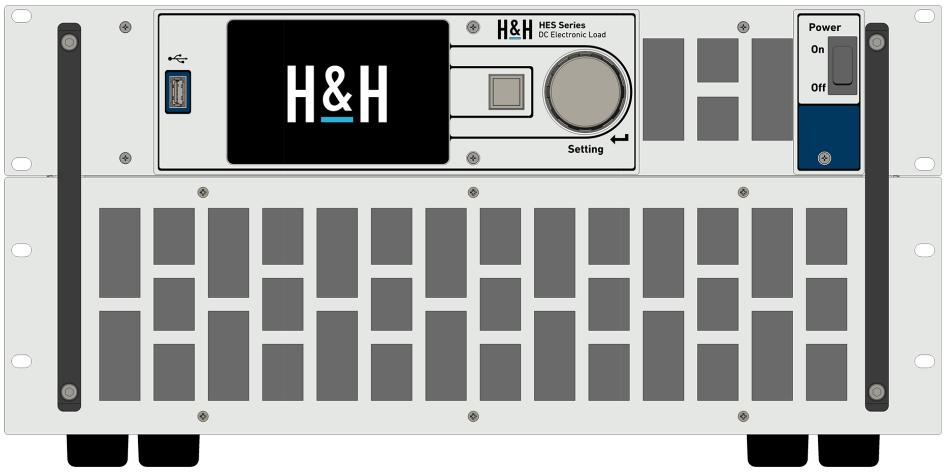

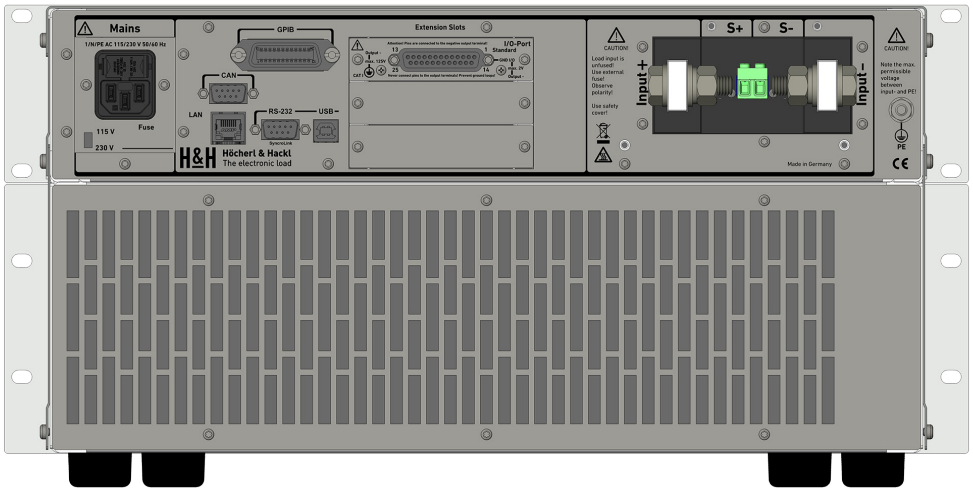

HES 19“, > 5 U

Powerful models with 8, 11, or 14 U are expanded with 3 U power units.

Options

Option HES10
Installation kit for 1 device with ½ 19", 2 U

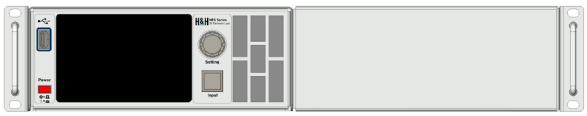

Option HES11
Installation kit for 2 devices with ½ 19", 2 U

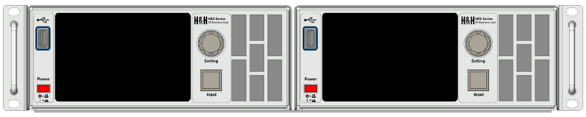

Option HES12
Installation kit for 1 device with 19", 2 U

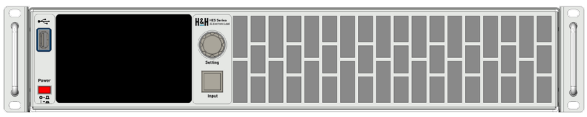

Optional installation kits are available for devices up to 2,100 W for 19" installation. Larger devices from 3 U are already equipped for installation.

Option HES14
Heavy-weight castors

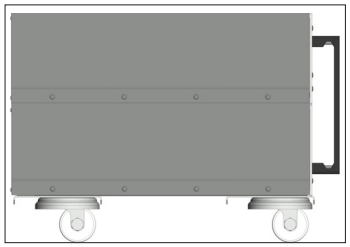
Castors

Steerable castors can be screwed onto large devices to facilitate transport. This often eliminates the need for a 19" cabinet.
This option is available for devices from 5U and is only suitable for hard floors.

Load Terminals

BPK4-30L

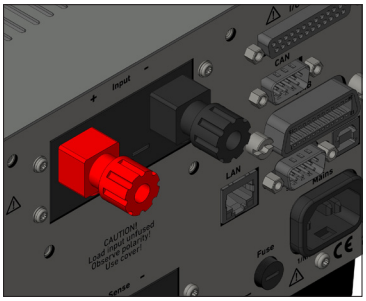

Touch-protected binding posts for 4 mm plug
max. 30 A
Connection of stripped wires up to 4 mm diameter

BPK4-60L

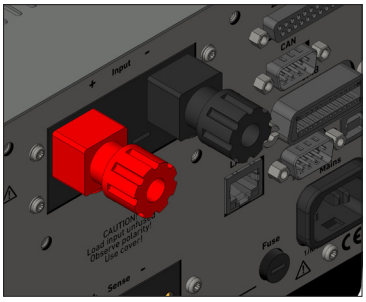

Touch-protected binding posts for 4 mm plug
max. 60 A
Connection of stripped wires up to 6 mm diameter

SBU4-32

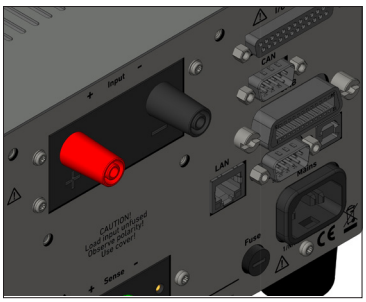

Touch-protected binding post for 4 mm plugs
max. 32 A

FKS20/5-SM8
FKS25/8-SM10
FKS25/10-SM10
FKS40/12-SM12

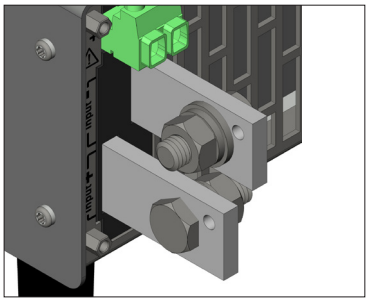

Vertical flat copper bars (FKS) with hole for screw (inclusive screws, nuts and washers).
FKS20/5-SM8:
flat copper bars 20 x 5 mm with screw M8
FKS25/8-SM10:
flat copper bars 25 x 8 mm with screw M10
FKS25/10-SM10:
flat copper bars 25 x 10 mm with screw M10
FKS40/12-SM12:
flat copper bars 40 x 12 mm with screw M12

Sense Terminals

PH2/7.62-BU16

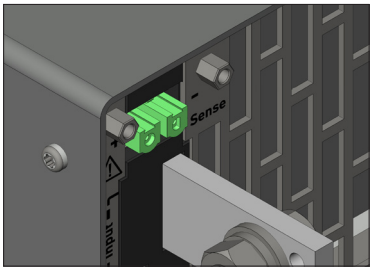

Phoenix socket strip bipolar
Grid dimension 7.62 mm
max. 16 A
incl. mating connector from PHOENIX CONTACT
(Phoenix order no.: 1745629)

Special Ranges

Customized Current, Voltage, Resistance, and Power Ranges

We tailor the measurement ranges to the customer's specific application. The smaller the measurement range, the higher the adjustment and measurement resolutions - and thus the better the accuracy.

Examples of Special Designs

Special Design SA5 „Mobile Load“

For location-independent applications outside the laboratory, we offer a solution with DC power supply input. Protective brackets on the rear, side lashing eyes, and load connections on top allow operation in a moving vehicle, for example, to test control units.

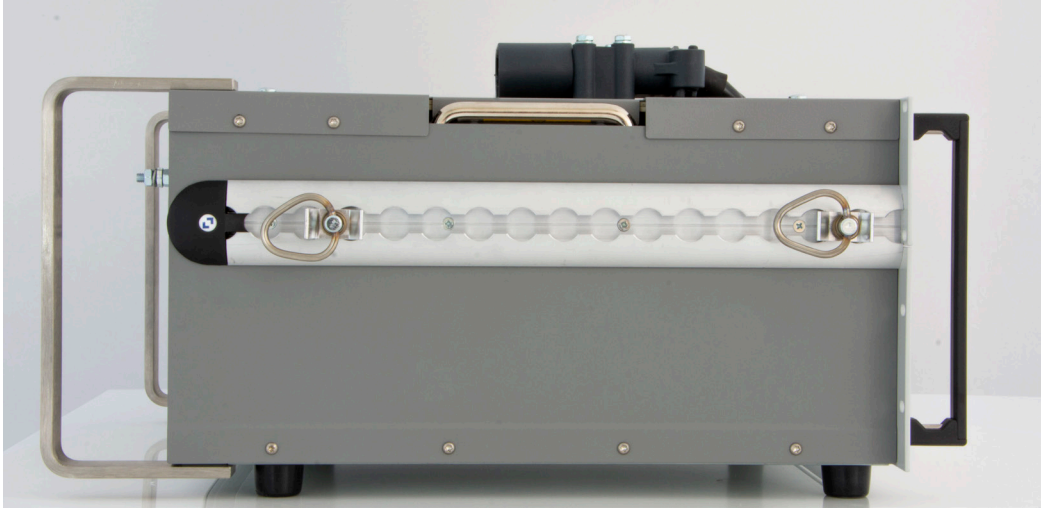

Special model SA5 for in-vehicle use

Modified technical specifications

We check the feasibility of specific requirements for special applications, such as particularly high short-term power or customized rise times.
Just ask us!

Permissible voltages

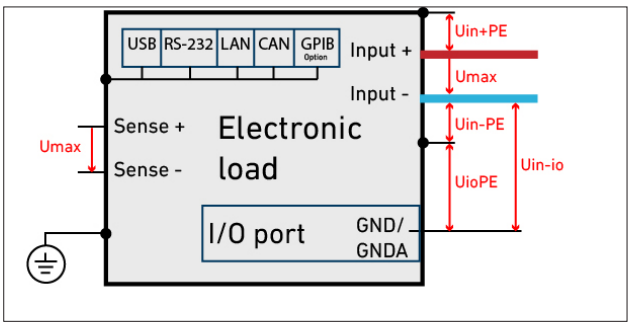

Permissible voltages at input and sense
For specifications, see series-specific data

Model Overview HES Standard

Production series A, rev. 1. Subject to technical changes.

Model	Maximum Input Voltage Umax	Maximum Current Imax	Continuous Power
HES606	60 V	60 A	600 W
HES612	120 V	20 A	600 W
HES630	300 V	16 A	600 W
HES660	600 V	8 A	600 W
HES680	800 V	6 A	600 W
HES1406	60 V	120 A	1400 W
HES1412	120 V	40 A	1400 W
HES1430	300 V	32 A	1400 W
HES1460	600 V	16 A	1400 W
HES1480	800 V	12 A	1400 W
HES2106	60 V	180 A	2100 W
HES2112	120 V	60 A	2100 W
HES2130	300 V	48 A	2100 W
HES2160	600 V	24 A	2100 W
HES2180	800 V	18 A	2100 W
HES3206	60 V	300 A	3200 W
HES3212	120 V	150 A	3200 W
HES3230	300 V	60 A	3200 W
HES3260	600 V	40 A	3200 W
HES3280	800 V	30 A	3200 W
HES4806	60 V	450 A	4800 W
HES4812	120 V	225 A	4800 W
HES4230	300 V	90 A	4200 W
HES4260	600 V	60 A	4200 W
HES6406	60 V	600 A	6400 W
HES6412	120 V	300 A	6400 W
HES5630	300 V	120 A	5600 W
HES5660	600 V	80 A	5600 W
HES8006	60 V	750 A	8000 W
HES8012	120 V	375 A	8000 W
HES7030	300 V	150 A	7000 W
HES7060	600 V	100 A	7000 W
HES9606	60 V	900 A	9600 W
HES9612	120 V	450 A	9600 W
HES9830	300 V	210 A	9800 W
HES8430	300 V	180 A	8400 W
HES11230	300 V	240 A	11200 W
HES14030	300 V	300 A	14000 W
HES9860	600 V	140 A	9800 W
HES8460	600 V	120 A	8400 W
HES11206	60 V	1050 A	11200 W
HES11212	120 V	525 A	11200 W
HES12806	60 V	1200 A	12800 W
HES12812	120 V	600 A	12800 W
HES11260	600 V	160 A	11200 W
HES4280	800 V	45 A	4200 W
HES5680	800 V	60 A	5600 W
HES7080	800 V	75 A	7000 W
HES8480	800 V	90 A	8400 W
HES9880	800 V	105 A	9800 W
HES12680	800 V	135 A	12600 W
HES14080	800 V	150 A	14000 W
HES11280	800 V	120 A	11200 W
HES14406	60 V	1350 A	14400 W
HES14412	120 V	675 A	14400 W
HES12630	300 V	270 A	12600 W
HES14060	600 V	200 A	14000 W
HES12660	600 V	180 A	12600 W

Model Overview HES - Multi-Range Models MR

Production series A, rev. 1. Subject to technical changes.

Model	Maximum Input Voltage Umax	Maximum Current Imax	Continuous Power
HES508MR4	80 V	60 A	500 W
HES512MR4	120 V	40 A	500 W
HES530MR3	300 V	16 A	500 W
HES580MR3	800 V	6 A	500 W
HES1008MR4	80 V	120 A	1000 W
HES1012MR4	120 V	80 A	1000 W
HES1030MR3	300 V	32 A	1000 W
HES1080MR3	800 V	12 A	1000 W
HES1508MR4	80 V	180 A	1500 W
HES1512MR4	120 V	120 A	1500 W
HES1530MR3	300 V	48 A	1500 W
HES1580MR3	800 V	18 A	1500 W

Model Overview HES - Zero-Volt Models ZV

Production series A, rev. 1. Subject to technical changes.

Model	Maximum Input Voltage Umax	Maximum Current Imax	Continuous Power
HES606ZV	60 V	60 A	600 W
HES612ZV	120 V	20 A	600 W
HES1206ZV	60 V	120 A	1200 W
HES2106ZV	60 V	360 A	2100 W
HES2306ZV	60 V	300 A	2300 W
HES2606ZV	60 V	200 A	2600 W
HES3206ZV	60 V	540 A	3200 W
HES3506ZV	60 V	450 A	3500 W
HES3706ZV	60 V	360 A	3700 W
HES4306ZV	60 V	720 A	4300 W
HES4606ZV	60 V	600 A	4600 W
HES4806ZV	60 V	540 A	4800 W
HES6006ZV	60 V	720 A	6000 W
HES7506ZV	60 V	720 A	7500 W

Model Overview HES - High Voltage Models HV

Production series A, rev. 1. Subject to technical changes.

Model	Maximum Input Voltage Umax	Maximum Current Imax	Continuous Power
HES24K12HV	1200 V	12 A	2400 W
HES36K12HV	1200 V	18 A	3600 W
HES48K12HV	1200 V	24 A	4800 W
HES60K12HV	1200 V	30 A	6000 W

Options and Accessories

Order number	Description
HES02	GPIB interface
HES06	Galvanically isolated I/O port for retrofitting of existing device
HES06-N	Galvanically isolated I/O port for new device
HES10	19" installation kit for 1 device with ½ 19", 2 U
HES11	19" installation kit for 2 devices with ½ 19", 2 U
HES12	19" installation kit for 1 device with 19", 2 U
HES14	Castors for devices up from 5 U (1 set = 4 pcs.)
FCC-HESxx	Factory Calibration Certificate
K-RS-SNM 9-9	RS-232 cable (nullmodem cable)
SAB-HES-2CU	Additional safety cover for HES 2 U copper bars and sense terminals
SAB-HES-2PK	Additional safety cover for HES 2 U binding posts and sense terminals
SAB-HES-2SB	Additional safety cover for HES 2 U touch-protected binding posts and sense terminals
SAB-HES-3	Additional safety cover for HES 3 U load terminals
SAB-HES-3S	Additional safety cover for HES 3 U sense terminals
SAB-HES-5	Additional safety cover for HES 5 U load and sense terminals
PH2/7.62-ST16	Additional mating connector for sense terminals
SENSADAPT/PH2/POK/60V	Sense-Adapter from Phoenix PH2 to 4 mm binding post, max. 60 V
SENSADAPT/PH2/POK/1200V	Sense-Adapter from Phoenix PH2 to 4 mm touch-protected binding post, max. 1200 V
K-MS-HES+K-MS-CAN	Cable set master-slave, consisting of K-MS-HES and K-MS-CAN (2 m each)
K-MS-HES	Master-slave cable I/O port (2 m)
K-MS-CAN	Master-slave cable CAN (2 m)
SubD25-Doppler	Adapter 1x D-sub 25 male to 2x D-sub 25 female for I/O port
SX	Modified setting range for HES series - only after consulting H&H
SSX	Customized setting range - only after consulting H&H

Series-Specific Data HES Series

Production series A, rev. 1. Subject to technical changes.

The specified accuracies apply at an ambient temperature of 23 ±5 °C, with the sense lines connected, and when the devices are operated on clean power supplies (ripple and noise < 0.1%). Accuracy may decrease at higher levels of ripple and noise. Technical specifications may vary for special devices.

Operating modes	
Basic operating modes	CC, CV, CR, CP
Combined operating modes	CC+CV, CR+CC+CV, CP+CC+CV, CV+CC
Accuracy of setting	
Voltage	±0.05 % of setting value, ±0.05 % of range
Current	HES MR (R1): ±0.2 % of setting, ±0.1 % of range others: ±0.2 % of setting value, ±0.05 % of range
Resistance (at 5 ... 100 % of the voltage range)	±1.4 % of the setting value, ±0.3 % of the current range
Power (at U and I > 30 % of the range)	±0.35 % of the setting, ±0.1 % of the range
Power (at U or I 5 ... 30 % of the range)	±0.7 % of the setting, ±0.25 % of the range
Resolution	14 Bit
Accuracy of adjustable protections	
Overcurrent protection	±1.4 % of the setting value, ±0.3 % of the current range
Undervoltage protection	±0.5 % of the setting value, ±0.3 % of the current range
Resolution	12 bits
Accuracy of measurement slow	
Voltage	±0.02 % of the measured value, ±0.01 % of the range
Current	±0.2 % of the measured value, ±0.05 % of the range
Resistance	is calculated from voltage and current
Power	is calculated from voltage and current
Resolution	23 bits
Measuring rate	250 ms, not triggerable
Accuracy of display	
Number of decimal places	5
Accuracy	Accuracy of measurement slow ±1 digit of the display value
Accuracy of measurement fast	
Voltage	±0.2 % of the measured value, ±0.1 % of the range
Current	HES MR (R1): ±0.2 % of the measured value, ±0.2 % of the range others: ±0.2 % of the measured value, ±0.1 % of the range
External control voltage reading 0 ... 10 V	±0.2 % of the measured value, ±0.1 % of the range
Resistance	is calculated from voltage and current
Power	is calculated from voltage and current
Resolution	16 Bit
Sampling time	200 µs ... 1000 s, resolution 200 µs
Accuracy of trigger voltage and current measurement	
Trigger voltage	±1 % of voltage range
Trigger current	±1 % of current range
Sampling rate	200 µs

Dynamic function LIST	
Operating modes	CC, CV, CR, CP
Number of load levels	max. 300, with ramp, dwell and sampling times
Accuracy of load levels	see setting accuracies
Dwell times	200 µs ... 1000 s
Ramp times	0 ... 1000 s
Resolution	200 µs
Sampling times	200 µs ... 1000 s, resolution 200 µs
Delay at triggered start	max. 300 µs
Dynamic function rectangular	
Operating modes	CC, CV
Number of load levels	2
Accuracy of load levels	see accuracy of setting
Pulse durations	1 µs ... 9999.999 ms
Resolution	1 µs
Accuracy of setting times	±0.02 %
Dynamic function PWM	
Operating modes	CC, CV, CR
Number of load levels	2
Accuracy of load levels	see accuracy of setting
Frequency	0.1 Hz ... 10 kHz
Resolution	0.1 Hz
Accuracy of frequency	±0.02 %
Duty cycle	1 ... 99 %
Resolution	1 %
Dynamic function modulation	
Operating modes	CC, CV
Waveforms	sine, square, triangle
Frequency	0.1 Hz ... 10 kHz
Resolution	0.1 Hz
Accuracy of frequency	±0.02 %
Modulation depth	0 ... 100 %
Data acquisition (DAQ)	
To external flash drive	
Sampling time	0.1 ... 30.0 s, resolution 0.1 s
Measurement data	timestamp, voltage, current
Number of measurement points	limited by flash memory size
File format	.csv format
Accuracy	see accuracy of measurement slow
To internal memory	
Sampling time	200 µs ... 1000 s, resolution 200 µs, synchronized with dynamic function
Measurement data	timestamp, voltage, current
Number of measurement points	max. 40.000
Accuracy	see accuracy of measurement fast

Settings memory	
Number of memory positions (incl. programmed list)	9 selectable, 1 for last device settings at power off or mains failure
I/O port: inputs and outputs	
Inputs	analog load setting I and U analog setting of I and U protections load input activation operating mode selection CC/CV control speed selection remote shut-down readable digital input (by SCPI command) trigger input (edge triggered, positive/negative/either selectable) control input (activates I/O port)
Digital input levels	logical low: 0 ... 0.8 V, logical high: 3 ... 30 V
Outputs	analog voltage monitor output analog current monitor output load input activation state status overload (OV, OCP, OPP, OTP) programmable logic output (by SCPI command) trigger output
Digital output levels	logical low: 0 ... 0.8 V, logical high: 5 V/24 V selectable, max. 10 mA (push-pull)
I/O port: accuracy analog control 0 ... 10 V	
Voltage	±0.1 % of setting, ±0.1 % of range
Current	HES MR (R1): ±0.2 % of setting, ±0.2 % of range others: ±0.2 % of setting, ±0.1 % of range
Resistance at U > 5 % of voltage range	±1.6 % of setting, ±0.4 % of current range
Power at U and I > 30 % of corresponding range	±0.55 % of setting, ±0.2 % of range
Power at U and I > 5 % and < 30 % of corresponding range	±0.9 % of setting, ±0.35 % of range
Overcurrent protection	±1 % of the set value, ±0.4 % of range
Undervoltage protection	±0.5 % of the set value, ±0.3 % of range
	Input resistance of analog inputs > 10 kΩ
I/O port: accuracy analog monitor outputs 0 ... 10 V	
Voltage	±0.1 % of analog signal of real value, ±15 mV offset voltage
Current	±0.2 % of analog signal of real value, ±15 mV offset voltage
	Minimum load 2 kΩ
I/O port: permissible voltages	
Uin-io (GND I/O port - neg. load input)	Standard I/O port: HES ZV: galvanical insulation necessary, others: max. 2 V* isolated I/O port (Option HES06): HES ZV: max. 2 V*, others: max. 800 V*
UioPE (GND I/O port - PE)	Standard-I/O-Port: max. 125 V* isolated I/O port (Option HES06): max. 50 V*
	*) pos. or neg. DC voltage

Input	
Input resistance	> 50 kΩ when load input is off standard models with diode function at reverse polarity up to nominal current HES ZV have no reverse polarity protection!
Input capacity	model specific
Parallel operation	up to 5 units in master-slave mode
Maximum input voltage Umax	model specific
Minimum input voltage Umin for maximum current	model specific
Input: permissible voltages	
Uin-PE (neg. load input - PE)	standard I/O port: max. 125 V* isolated I/O port (Option HES06): HES ZV: max. 125 V, others: max. 800 V*
Uin+PE (pos. load input - PE)	standard I/O port: Umax + max. 125 V* isolated I/O port (Option HES06): HES ZV: Umax + max. 125 V*, others: Umax + max. 800 V*
	*) pos. or neg. DC voltage
Power	
Continuous power	model specific
Derating	HES MR: -1,6 %/°C for Ta > 21 °C others: -1,2 %/°C for Ta > 21 °C
Overload capability	model specific
Protection and monitoring	
Protective devices	overcurrent, overpower, overtemperature
Monitoring signals	overvoltage indication, reverse polarity indication, undervoltage indication (if input voltage is too low for set current)
Terminals	
Load input	model specific
Sense	PH2/7.62-BU16
Operating conditions	
Operating temperature	5 ... 40 °C
Storage temperature	-25 ... 65 °C
Max. operating height	2000 m above sea level
Pollution degree	2
Overvoltage category of mains	II
Max. humidity	80 % at 31 °C, linear derating to 50 % at 40 °C
Min. distance rear panel - wall or other objects	70 cm
Cooling	continuously controlled by temperature and current
Noise	model specific
Mains voltage	model specific
Mains cable	length max. 3 m
Power consumption	model specific
Housing	
Front panel color	RAL 7035 (light grey)
Rear panel color	stainless steel

Side panels and top color	RAL 7037 (dusty grey)
Dimensions, weight	model specific
Safety and EMC	
Protection class	1
Measuring category	O (CAT I according to EN 61010-1:2004)
Electrical safety	EN 61010-1:2010 + A1:2019 + A1:2019/AC:2019 EN IEC 61010-2-030:2021 + A11:2021
EMC	Immunity: EN 61326-1:2013 (for use in industrial and domestic environments) Emissions: EN 61326-1:2013 Group 1 Class B (for use in domestic environments)
Interfaces installed as standard	
Data interfaces	RS-232, USB, LAN, CAN
I/O port	standard (not isolated)
Available options	
Data interfaces	
HES02	GPIB interface
Mechanical options	
Installation kits	
HES10	for one 1/2 19" device
HES11	for two 1/2 19" devices
HES12	for one 2U 19" device
Others	
HES14	Heavy-load castors for devices from 5 U
Hardware expansion	
HES06	galvanically isolated analog I/O port
Calibration	
Recommended calibration interval	2 years (empirical value as a guideline for the initial period of use; can be adjusted depending on the intended use, duration of use, environmental conditions, and relevance of the application)
FCC-HESXX	factory calibration certificate, once for free with new device
Warranty	
Warranty	2 years

Höcherl & Hackl GmbH
Industriestr. 13
94357 Konzell
GERMANY

Tel.: +49 9963/94301- 0
Fax: +49 9963/94301-84
office@hoecherl-hackl.com
www.hoecherl-hackl.com